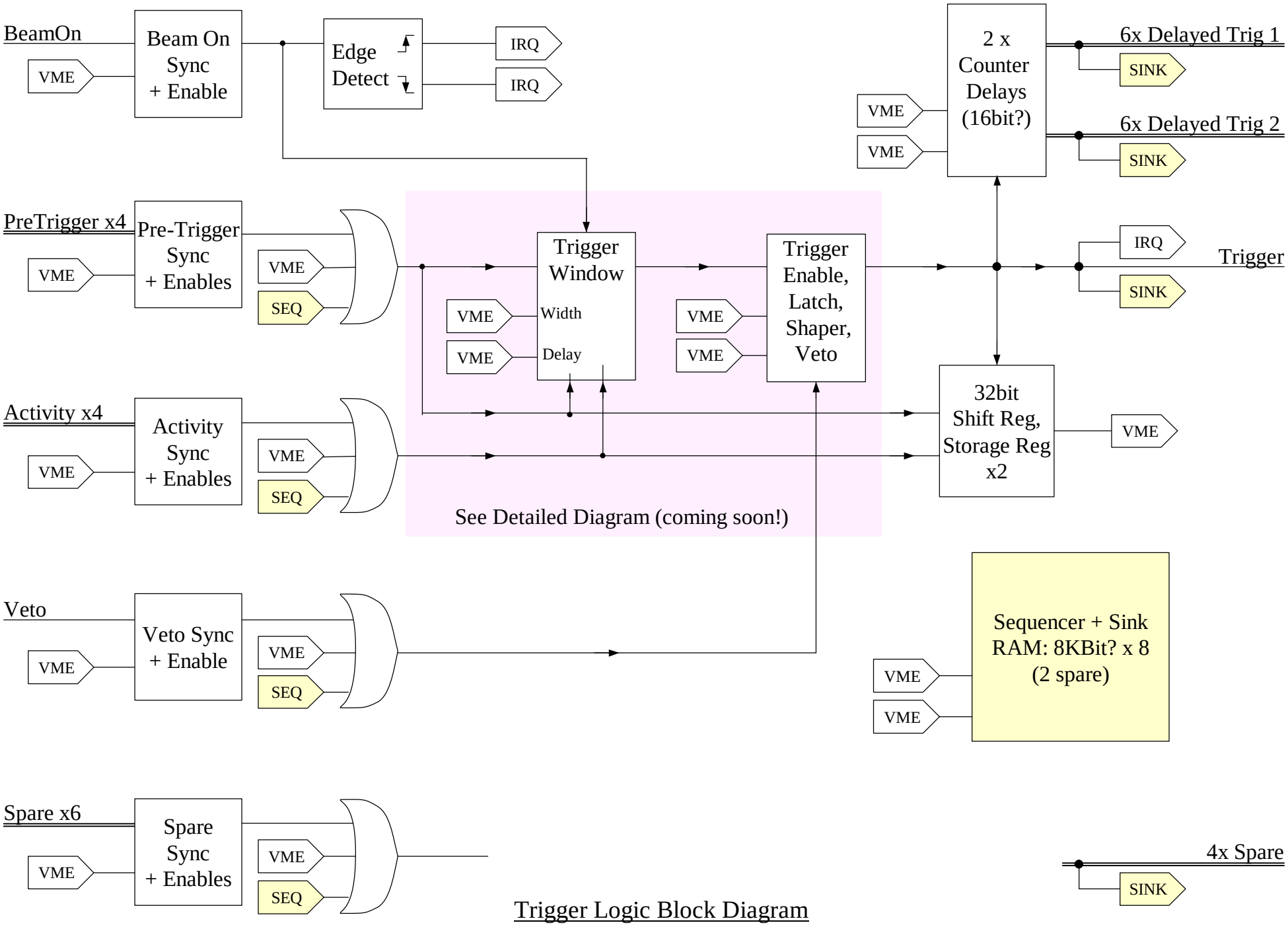

Trigger Logic Block Diagram