LASER_INTERFACE

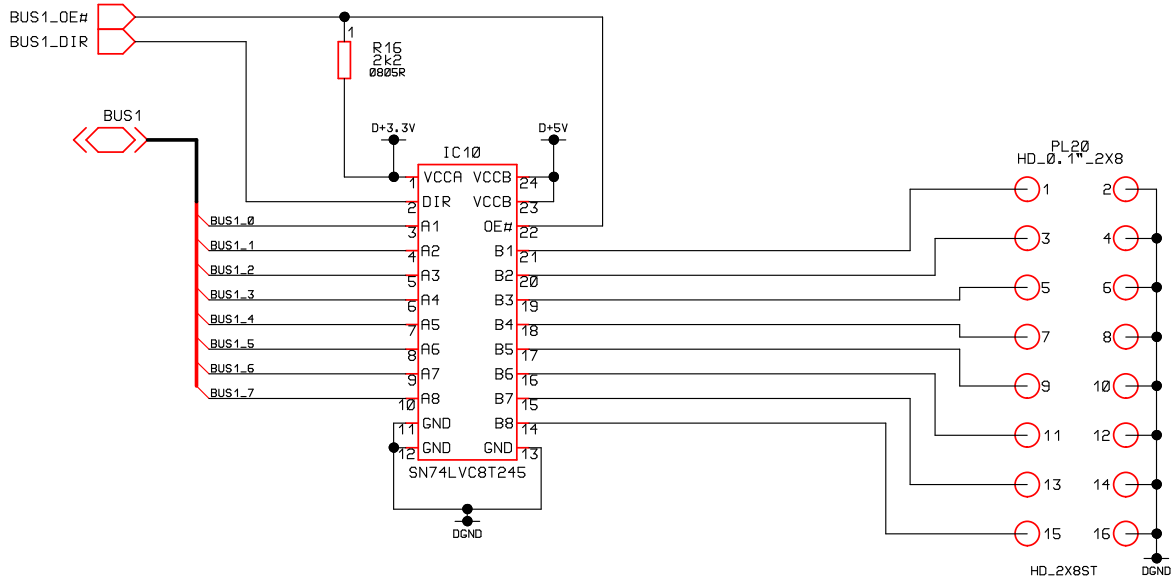

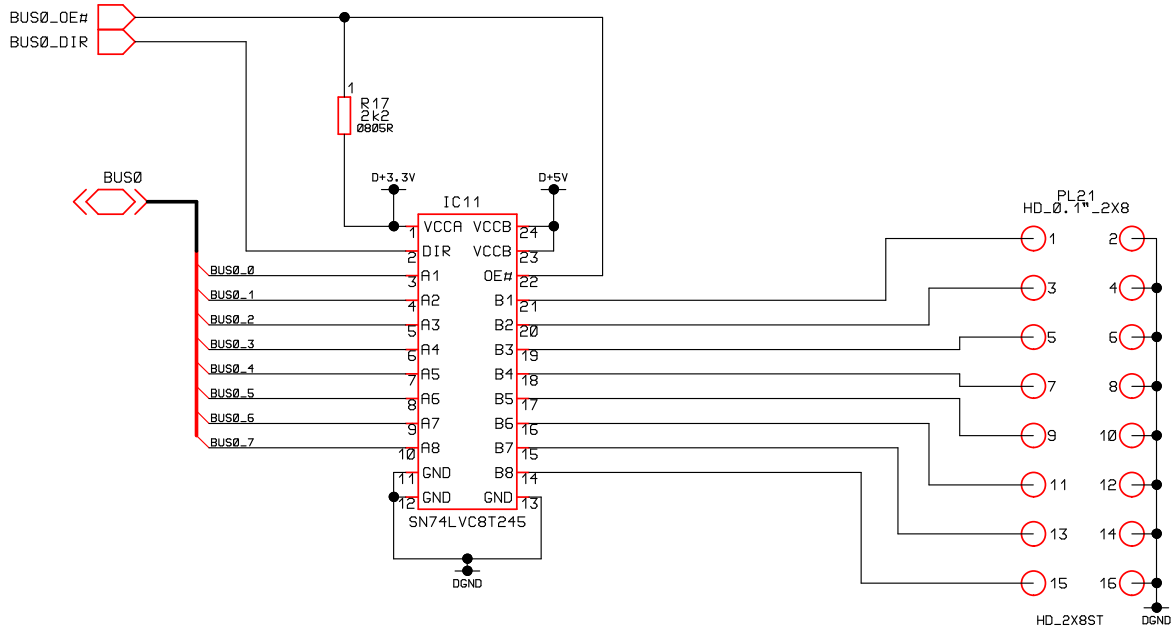

VDDA/B decoupling:
close to 245 pins (0.1closest)

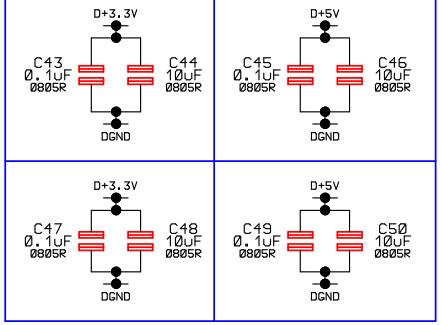

NB: PLX + PLY =
IDC pins please (not socket)

HEP, Imperial College, London		
Title: USBDAQ/CALICE		Engineer:
Subtitle: LASER INTERFACE		Drawn by:
		Ver: v11.rxl
Sheet:	of:	Date: 21.6.07